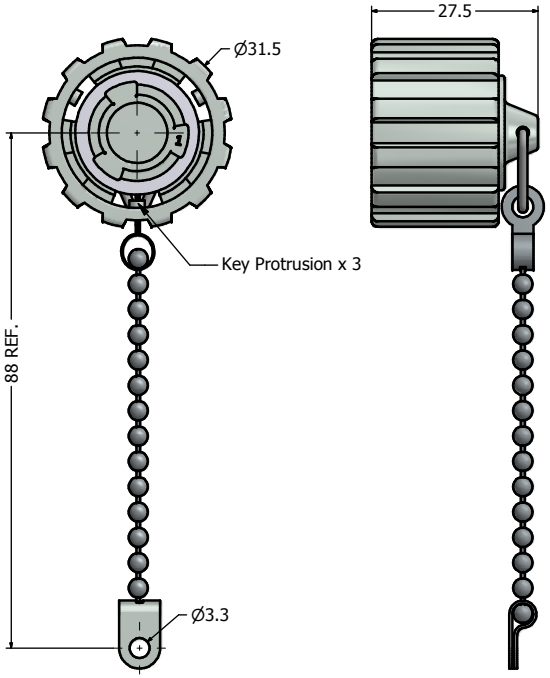

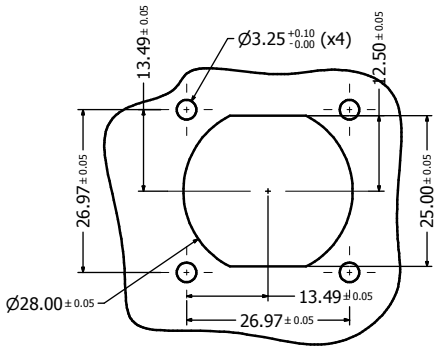

Recommended Double-D Panel Cutout

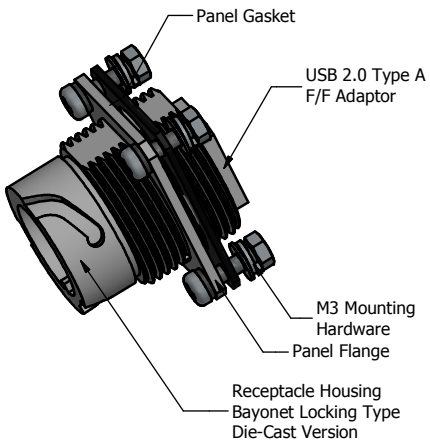

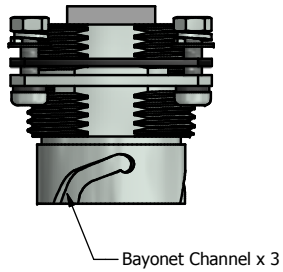

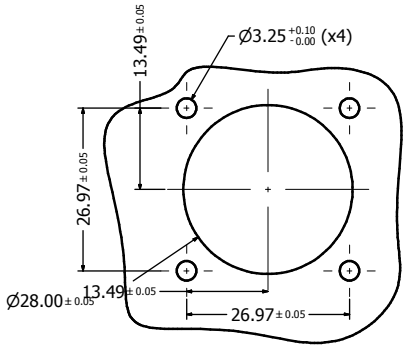

Recommanded Round Panel Cutout

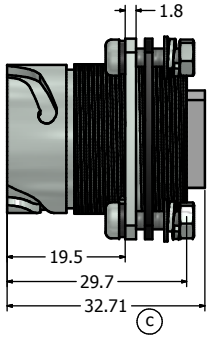

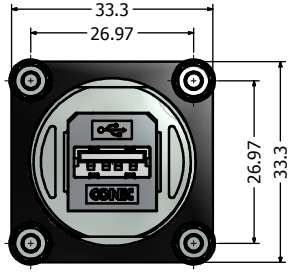

Notes:

1. Electrical Specifications:
   - Meets USB 2.0 Specification
   - Contact Resistance: 30 mOhm max.
   - Insulation Resistance: 1000 MOhm min. @ 100 VDC
   - Current Rating: 1.5 A max. at 25˚C
   - Working Voltage: 30 V (RMS) max.
   - DWV: 500 VAC/60s at sea level
   - Operating Temperature: -40˚C to +85˚C
2. Material and Finish:
   - Receptacle Housing & Protective Cover: Die-Cast, Nickel Plated
   - Panel Gasket: NBR, Color: Black
   - M3 Mounting Hardware: Stainless Steel
     includes 4 x (screw + nut + flat washer + spring lock washer)
   - Cover Gasket: Silcon, Color: White
   - Ball Chain Assembly, Copper Alloy and Stainless steel, Nickel Plated
   - USB Adaptor Insulator: PBT, UL94 V-0, Black
   - USB Adaptor Metal Shell: Copper Alloy, Nickel Plated
   - USB Adaptor Overmold material: PBT UL94 V-0, Color: Black
   - USB Contacts: Copper Alloy, Finish: 30 u" Gold min. over Nickel
3. Connector can be front or rear mounted to a maximum panel thickness of 3.2 mm.
4. IP67 rated when fully mated with appropriate mating connector
5. Hardware shipped unassembled
6. (b) Recommended mounting torque is 8 to 10 lb-inch

Pin-Assignment

Type A Female		Type A Female
Pin1	---------	Pin1
Pin2	---------	Pin2
Pin3	---------	Pin3
Pin4	---------	Pin4
Shell	---------	Shell

Directive 2002/95/EC RoHS Compliant

THIS DRAWING MAY NOT BE COPIED OR REPRODUCED IN ANY WAY, NOR MAY IT BE DISCLOSED TO A THIRD PARTY WITHOUT WRITTEN PERMISSION. OWNERSHIP AND COPYRIGHT OF CONEC CORPORATION.

DO NOT ALTER CAD DRAWING BY HAND

Customer:

Name	Title	Approval Date

Rev.	Changes	Date	Name
c	1 x c	May/22/2013	Vincent Ke
b	1 x b	Mar/05/2013	Vincent Ke
a	original		

Tolerance
Unless otherwise specified
0 PLC ± 0.30
1 PLC ± 0.20
2 PLC ± 0.10
3 PLC ± 0.05
ANGLES ± 1˚

	Date	Name
2012		
Draw.	Sept. 27	Vincent Ke
Appd.	Sept. 27	J. Chaudry
Norm		
D-old		

Autodesk Inventor

CONEC®

Scale:

Dim. in mm

Material: See Notes

IP67 USB Type A F/F Adaptor
Receptacle (with Flange) + Cover Kit
Nickel Plated Zinc Die-Cast Version

Drawing No.: 17K1A355

DIN A3

Part No.: 17-210121

Sheet 1/1