ROHS COMPLIANT

PRODUCT DATA DRAWING

REVISION HISTORY			
REV	DESCRIPTION	DATE	APPROVED
-	DCN 35971	07/08	STW

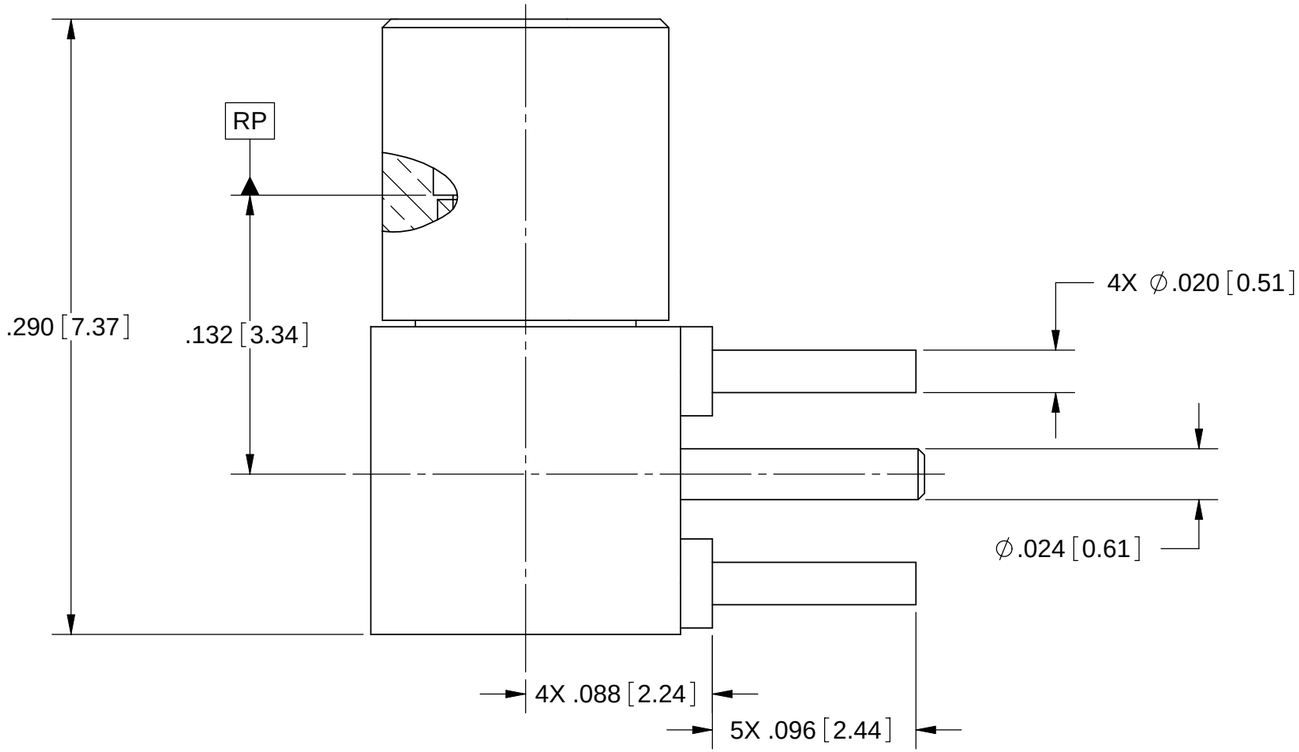

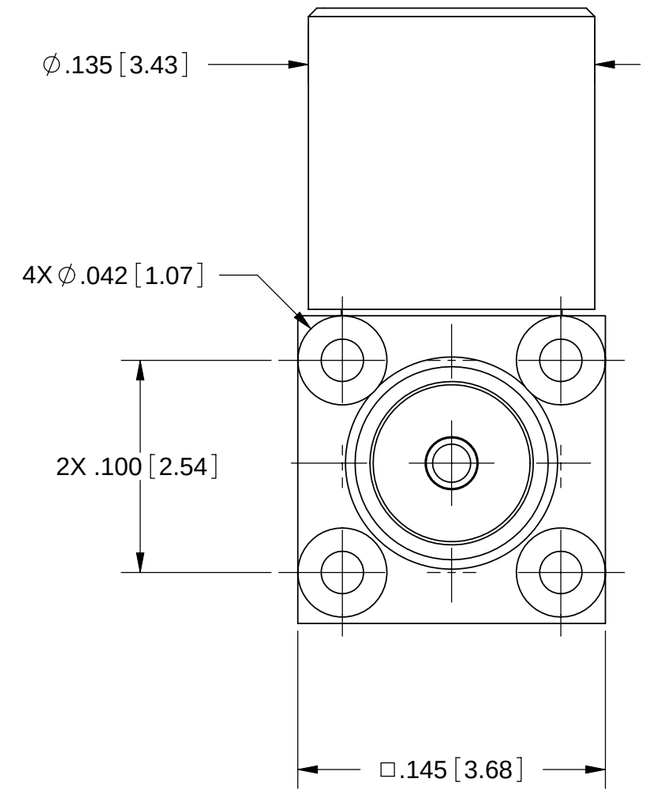

MATERIAL:

BODY & CONTACT: BERYLLIUM COPPER PER ASTM-B-196, ALLOY No. UNS C17300, TD04

SLEEVE: STAINLESS STEEL PER AMS-5640, ALLOY NO. UNS S30300, TYPE 1

INSULATOR: PTFE PER ASTM D1710, TYPE I, GRADE 1, CLASS B

FINISH:

SLEEVE: PASSIVATED PER AMS-2700, TYPE 2

BODY, SLEEVE & CONTACT: GOLD PER ASTM B488, TYPE II, CODE C, CLASS 1.27; OVER NICKEL PER AMS-QQ-N-290, CLASS 1, .00005" MIN.

PERFORMANCE:

IMPEDANCE: 50 OHMS
FREQ. RANGE: DC TO 26.5 GHz
VSWR: 1.401:1 DC TO 26.5 GHz
DWV: 325 VRMS
OPERATING TEMP.: -55˚C TO +125˚C

NOTES:

1. FOR RECOMMENDED FOOTPRINT TO YOUR SPECIFIC PCB, CONTACT SV MICROWAVE SALES DEPARTMENT (sales@svmicro.com, 561-840-1800).

SV PART NUMBER	INTERFACE
3212-40002	FD
3212-40003	SB

MATERIAL: SEE NOTES
FINISH: SEE NOTES
SURFACE AREA: N/A

PROPRIETARY

THE INFORMATION CONTAINED IN THIS DRAWING IS THE SOLE PROPERTY OF SV MICROWAVE, INC. ANY REPRODUCTION IN PART OR AS A WHOLE WITHOUT THE WRITTEN PERMISSION OF SV MICROWAVE, INC IS PROHIBITED.

DIMENSIONS ARE IN INCHES TOLERANCES:
FRACTIONAL: ±1/64 ANGULAR: X° ±1°0' X°X' ±15'
DECIMAL: .X ±.030 .XX ±.010 .XXX ±.005

INTERPRET DIMENSIONS AND TOLERANCES PER ASME Y14.5M - 1994

THIRD ANGLE PROJECTION

UNLESS OTHERWISE SPECIFIED
1) ALL DIMENSIONS ARE IN INCHES [MILLIMETERS]
2) ALL DIMENSIONS ARE AFTER PLATING.
3) BREAK CORNERS & EDGES .005 R. MAX.
4) CHAM. 1ST & LAST THREADS.
5) SURFACE ROUGHNESS 63 MIL-STD-10.
6) DIA.'S ON COMMON CENTERS TO BE CONCENTRIC WITHIN .005 T.I.R.
7) REMOVE ALL BURRS

DRAWN:	PJS	07/24/08
CHECKED:	STW	07/24/08
APPROVED:	STW	07/24/08

SV Microwave, Inc.
2400 Centrepark West Drive, Suite 100
West Palm Beach, FL 33409

TITLE: SMPM RA. MALE SMOOTH BORE TO PCB MOUNT

SIZE	CAGE CODE	DWG. NO.
B	95077	3212-4000X

SCALE: 14:1 SHEET 1 OF 1