RECTRON Rectifiers

RECTRON

Products may be RoHS compliant. Check mouser.com for RoHS status.

DIMENSIONS: in.

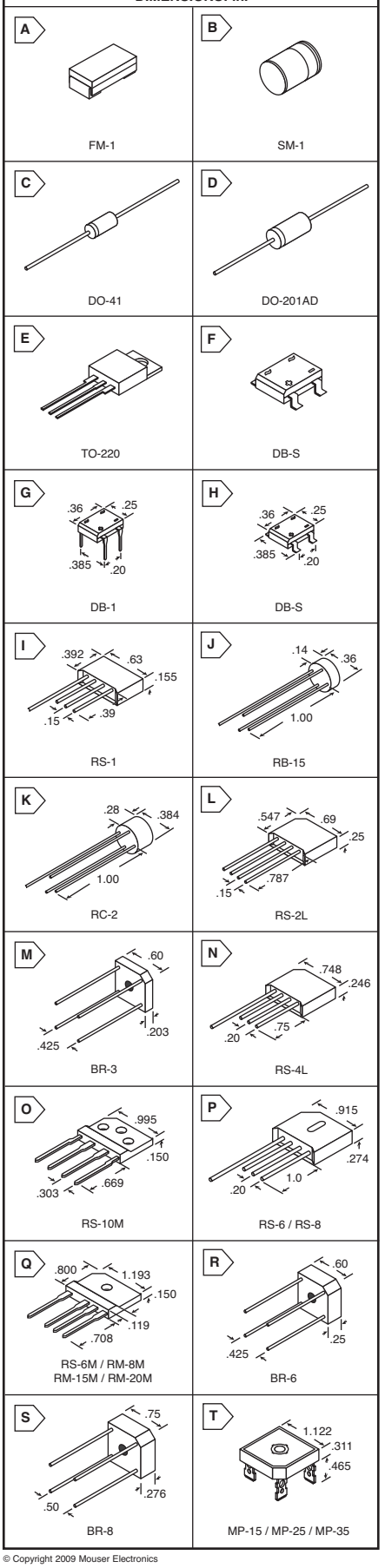

RECTRON GLASS PASSIVATED

- Operating and storage temperature: -65°C to +175°C

For quantities greater than listed, call for quote.

MOUSER STOCK NO.	Fig.	PRV (V)	IFM (Surge) (A)	Price Each 1	100	500
1.0 Amp						
♦583-FM4001	A	50	30	.23	.159	.139
♦583-FM4002	A	100	30	.26	.183	.165
♦583-SM4003	B	200	30	.11	.09	.07
♦583-FM4004	A	400	30	.25	.17	.142
♦583-SM4004	B	400	30	.26	.177	.157
♦583-SM4007	B	1000	30	.38	.247	.207

RECTRON FAST RECOVERY, GLASS PASSIVATED

Specifications:

- Operating temp.: -65°C to +150°C
- Storage temp.: -65°C to +150°C

For quantities greater than listed, call for quote.

MOUSER STOCK NO.	Fig.	PRV (V)	Trr (ns)	Price Each 1	100	500
3.0 Amp						
583-FR307G	D	1000	500	.82	.606	.476

RECTRON SUPER FAST RECOVERY

Specifications:

- Operating temperature: -65°C to +150°C
- Storage temperature: -65°C to +150°C

For quantities greater than listed, call for quote.

MOUSER STOCK NO.	Fig.	PRV (V)	Trr (ns)	Price Each 1	100	500
1.0 Amp						
583-EDB104S	E	200	50	.90	.82	.71

RECTRON SCHOTTKY BARRIER

Specifications:

- Operating temperature: -65°C to +125°C
- Storage temperature: -65°C to +150°C

For quantities greater than listed, call for quote.

MOUSER STOCK NO.	Fig.	PRV (V)	IFM (Surge) (A)	Price Each 1	100	500
1.0 Amp						
♦ 583-FM5817	E	20	25	.61	.465	.395
♦ 583-FM5818	E	30	25	.56	.435	.335
♦ 583-FM5819	E	40	25	.56	.435	.375

RECTRON BRIDGE RECTIFIERS

✻UL File No. 94233 ♦ Surface Mount Device

For quantities greater than listed, call for quote.

MOUSER STOCK NO.	Fig.	PRV (V)	IFM (Surge) (A)	Price Each 1	100	500
1.0 Amp						
✻583-DB101	G	50	50	.38	.325	.275
♦✻583-DB101S	H	50	50	.43	.385	.315
✻583-DB102	G	100	50	.40	.345	.285
♦✻583-DB102S	H	100	50	.64	.582	.522
✻583-DB103	G	200	50	.43	.375	.315
♦✻583-DB103S	H	200	50	.47	.415	.345
✻583-DB104	G	400	50	.44	.385	.315
✻583-DB105	G	600	50	.48	.415	.345
✻583-DB107	G	1000	50	.56	.49	.40
✻583-RS101	I	50	30	.43	.38	.31
✻583-RS102	I	100	30	.45	.40	.33
✻583-RS105	I	600	30	.55	.466	.396
1.5 Amp						
✻583-RB151	J	50	50	.26	.22	.18
✻583-RB152	J	100	50	.27	.23	.19
✻583-RB153	J	200	50	.28	.24	.19
✻583-RB154	J	400	50	.29	.25	.20
✻583-RB155	J	600	50	.37	.31	.25
583-RB157	J	1000	50	.42	.36	.29

RECTRON BRIDGE RECTIFIERS (CONT.)

✻UL File No. 94233 ♦ Surface Mount Device

For quantities greater than listed, call for quote.

MOUSER STOCK NO.	Fig.	PRV (V)	IFM (Surge) (A)	Price Each 1	100	500
2.0 Amp						
583-RC201	K	50	60	.38	.327	.277
583-RC202	K	100	60	.39	.337	.277
583-RC203	K	200	60	.40	.35	.29
583-RC204	K	400	60	.42	.37	.31
583-RC205	K	600	60	.45	.403	.333
583-RC206	K	800	60	.51	.444	.374
✻583-RS201L	L	50	60	.54	.478	.408
✻583-RS202L	L	100	60	.54	.481	.411
✻583-RS203L	L	200	60	.56	.494	.424
✻583-RS204L	L	400	60	.57	.501	.431
✻583-RS205L	L	600	60	.60	.534	.454
✻583-RS206L	L	800	60	.64	.556	.476
✻583-RS207L	L	1000	60	.67	.594	.504
3.0 Amp						
✻583-BR305	M	50	50	.47	.414	.344
✻583-BR31	M	100	50	.49	.426	.356
✻583-BR32	M	200	50	.50	.432	.362
✻583-BR34	M	400	50	.52	.453	.373
✻583-BR36	M	600	50	.55	.47	.39
583-BR310	M	1000	50	.67	.583	.483
4.0 Amp						
✻583-RS401L	N	50	200	.86	.756	.626
✻583-RS402L	N	100	200	.86	.756	.626
✻583-RS403L	N	200	200	.93	.818	.678
✻583-RS404L	N	400	200	.95	.826	.686
✻583-RS405L	N	600	200	.98	.846	.706
✻583-RS406L	N	800	200	1.08	.945	.785
✻583-RS407L	N	1000	200	1.28	1.11	.92
✻583-RS405M	O	600	150	.99	.865	.715
6.0 Amp						
✻583-RS601	P	50	250	1.14	.986	.816
✻583-RS602	P	100	250	1.17	1.02	.84
✻583-RS604	P	400	250	1.32	1.14	.95
✻583-RS605	P	600	250	1.38	1.19	.99
✻583-RS606	P	800	250	1.62	1.41	1.16
583-RS607	P	1000	250	1.74	1.50	1.23
✻583-BR605	R	50	125	.84	.732	.602
✻583-BR61	R	100	125	.86	.742	.612
✻583-BR62	R	200	125	.96	.831	.681
✻583-BR64	R	400	125	1.03	.892	.732
✻583-BR66	R	600	125	1.07	.92	.75
✻583-BR68	R	800	125	1.20	1.04	.85
✻583-BR610	R	1000	125	1.40	1.20	.99
8.0 Amp						
583-RS802	P	100	250	1.24	1.08	.89
583-RS803	P	200	250	1.32	1.14	.95
583-RS804	P	400	250	1.37	1.19	.99
583-RS805	P	600	250	1.48	1.28	1.06
583-RS807	P	1000	250	1.84	1.60	1.31
✻583-BR81	S	100	125	.98	.852	.692
✻583-BR84	S	400	125	1.13	.973	.793
✻583-BR86	S	600	125	1.20	1.03	.85
10 Amp						
✻583-BR1005	S	50	200	1.10	.95	.77
✻583-BR101	S	100	200	1.12	.96	.78
✻583-BR102	S	200	200	1.13	.975	.795
✻583-BR104	S	400	200	1.20	1.03	.85
✻583-BR106	S	600	200	1.27	1.09	.90
✻583-BR108	S	800	200	1.40	1.20	.99
583-BR1010	S	1000	200	1.64	1.41	1.15
15 Amp						
✻583-MP1505	T	50	300	2.67	2.29	1.86
✻583-MP151	T	100	300	2.74	2.36	1.91
✻583-MP152	T	200	300	2.80	2.40	1.94
✻583-MP154	T	400	300	2.85	2.44	1.98
583-RS1505M	Q	600	250	2.37	2.05	1.67
583-RS1507M	Q	1000	250	3.00	2.57	2.10
25 Amp						
✻583-MP251	T	100	300	2.79	2.40	1.94
✻583-MP252	T	200	300	2.83	2.43	1.97
✻583-MP254	T	400	300	2.90	2.49	2.01
✻583-MP256	T	600	300	2.99	2.56	2.08
35 Amp						
✻583-MP3505	T	50	400	2.89	2.48	2.01
✻583-MP351	T	100	400	2.94	2.52	2.04
✻583-MP352	T	200	400	2.96	2.54	2.06
✻583-MP354	T	400	400	3.32	2.85	2.30
✻583-MP356	T	600	400	3.58	3.07	2.48
✻583-MP3510	T	1000	400	4.05	3.47	2.80

© Copyright 2009 Mouser Electronics

© Copyright 2009 Mouser Electronics