APM HEXSEAL Environmental Sealing Boots

APM HEXSEAL®

APM HEXSEAL PUSHBUTTON SWITCH BOOTS

- Silicone rubber boot, with molded-in mounting nut
- Completely covers actuator
- Meets MIL-B-5423
- Resistant to sunlight, weather, salt spray, ozone, fungus and most acids and lubricating oils
- RFI suffix are EMI shielded

RoHS Compliant

MOUSER STOCK NO.	APM Hexseal Part No.	Fig.	Thread Size	Dimensions: in.			Plunger Height (IN)	Color	Price Each		
				A	B	C			1	25	50
608-N3030	N3030	A	15/32-32NS-2B	0.547	0.625	0.422	0.281	Gray	3.01	2.82	2.65
608-N3030-2605	N3030 2605	A	15/32-32NS-2B	0.547	0.625	0.422	0.281	Green	2.92	2.74	2.57
608-N3030-2619	N3030 2619	A	15/32-32NS-2B	0.547	0.625	0.422	0.281	Yellow	2.92	2.74	2.57
608-N3030-2604	N3030 2604	A	15/32-32NS-2B	0.547	0.625	0.422	0.281	Red	3.45	3.30	3.25
608-NC3030	NC3030	A	15/32-32NS-2B	0.719	0.625	0.422	0.438	Gray	3.02	2.83	2.65
608-NH3030	NH3030	A	1/2-32NS-2B	0.547	0.625	0.422	0.281	Gray	3.02	2.84	2.65
608-N5040	N5040	A	1/4-40NS-2B	0.313	0.375	0.188	0.141	Gray	3.60	3.37	3.17
608-N5040G	N5040G	A	1/4-32NS-2B	0.313	0.375	0.188	0.203	Gray	3.60	3.37	3.17
608-N5040R	N5040R	A	1/4-40NS-2B	0.313	0.375	0.188	0.203	Gray	3.60	3.37	3.17
608-1231/8/49	1231/8/49	A	3/8-27NS-2B	0.653	0.500	0.300	0.545	Clear	2.76	2.58	2.43
608-1221/12	1221/12	B	3/8-27NS-2B	0.609	0.641	0.320	0.330	Gray	2.01	1.89	1.78
608-1221/15	1221/15	B	15/32-32NS-2B	0.719	0.766	0.375	0.400	Gray	2.12	1.99	1.86
608-C1221/21/4	C1221/21/4	B	3/8-27NS-2B	0.609	0.641	0.320	0.330	Clear	1.98	1.85	1.74
608-C1221/23	C1221/23	B	3/8-32NEF-2B	0.609	0.641	0.320	0.330	Clear	1.98	1.85	1.74
608-C1221/25	C1221/25	B	3/8-32NS-2B	0.609	0.500	0.320	0.545	Black	1.98	1.85	1.74
608-N3030-RFI	N3030 RFI	A	15/32-32NS-2B	0.547	0.625	0.422	0.281	Gray	7.40	6.94	6.51
608-NC3030-RFI	NC3030 RFI	A	15/32-32NS-2B	0.719	0.625	0.422	0.438	Gray	11.25	10.55	9.90
608-NH3030-RFI	NH3030 RFI	A	1/2-32NS-2B	0.547	0.625	0.422	0.281	Gray	12.15	11.39	10.69
608-1238/1	1238/1	C	15/32-32NS-2B	0.984	0.750	0.422	0.438	Armored	14.75	13.83	12.98

APM HEXSEAL TOGGLE SWITCH BOOTS

- Silicone rubber with molded-in hex mounting nut
- Seals both switch and panel cutout
- Meets MIL-B-5423
- Resistant to sunlight, weather, salt spray, ozone, fungus and most acids and lubricating oils
- RFI suffix are EMI shielded

RoHS Compliant

For quantities of 50 and up, call for quote.

MOUSER STOCK NO.	APM Hexseal Part No.	Fig.	Thread Size	Dimensions: in.			Plunger Height (IN)	Color	Price Each		
				A	B	C			1	25	50
608-N1030	N1030	D	15/32-32NS-2B	0.219	0.844	0.625	0.660	Gray	3.02	2.83	2.66
608-N1030-2504	N1030 2504	D	15/32-32NS-2B	0.219	0.844	0.625	0.660	Green	4.10	3.84	3.61
608-N1030-2503	N1030 2503	D	15/32-32NS-2B	0.219	0.844	0.625	0.660	Yellow	4.10	3.84	3.61
608-N1030-2508	N1030 2508	D	15/32-32NS-2B	0.219	0.844	0.625	0.660	Red	4.10	3.84	3.61
608-N1030A	N1030A	E	15/32-32NS-2B	0.219	0.875	0.625	0.660	Stainless-Steel	6.96	6.53	6.13
608-N1030B	N1030B	F	15/32-32NS-2B	0.078	0.437	0.625	—	Gray	3.02	2.83	2.66
608-N5030	N5030	D	1/4-40NS-2B	0.104	0.422	0.375	0.310	Gray	3.59	3.36	3.16
608-N5030L	N5030L	D	1/4-40NS-2B	0.062	0.500	0.375	0.370	Gray	3.59	3.36	3.16
608-N5032B	N5032B	F	1/4-40NS-2B	0.047	0.250	0.375	—	Gray	3.59	3.36	3.16
608-C1131/28	C1131/28	D	15/32-32NS-2B	0.219	0.937	0.625	0.710	Black	2.91	2.73	2.56
608-1131/26	1131/26	D	15/32-32NS-2B	0.219	1.093	0.625	0.900	Gray	3.01	2.82	2.65
608-50154	50154	D	15/32-32NS-2B	0.280	1.094	0.625	1.094	Gray	3.01	2.82	2.65
608-N5030S	N5030S	D	1/4-40NS-2B	0.062	0.594	0.375	0.500	Gray	3.59	3.36	3.16
608-IN1030-RFI	IN1030 RFI	D	15/32-32NS-2B	0.219	0.844	0.625	0.660	Gray	7.40	6.94	6.51
608-IN1030RFI1/232	IN1030 RFI 1/2-32	D	1/2-32NS-2B	0.219	0.844	0.625	0.660	Gray	12.42	11.64	10.93
608-N5030L-RFI	N5030L RFI	D	1/4-40NS-2B	0.062	0.500	0.375	0.360	Gray	12.42	11.64	10.93
608-N5030S-RFI	N5030S RFI	D	1/4-40NS-2B	0.062	0.594	0.750	0.500	Gray	12.42	11.64	10.93

APM HEXSEAL ROCKER SWITCH BOOTS

- High tear strength, transparent silicone rubber
- Resistant to sunlight, weather, salt spray, ozone, fungus and most acids and lubricating oils
- Does not compromise switch operability, position status viewing, or legend visibility
- Meets MIL-B-5423

RoHS Compliant

For quantities of 50 and up, call for quote.

MOUSER STOCK NO.	APM Hexseal Part No.	Fig.	Dimensions: in.					Color	Price Each		
			A	B	C	D	E		1	25	50
608-C1113/66	C1113/66	G	0.228	0.348	0.531	0.750	0.531	Clear	1.73	1.62	1.52
608-C1113/80	C1113/80	G	0.560	0.750	1.375	1.750	0.900	Clear	1.89	1.77	1.67

APM HEXSEAL ROTARY SHAFT SEALS

- For standard rotary switch/potentiometer shafts
- Seals boot shaft and panel cutout
- RFI suffix are EMI shielded
- Resistant to sunlight, weather, salt spray, ozone,fungus and most acids and lubricating oils
- Meets MIL-B-5423

RoHS Compliant

For quantities of 50 and up, call for quote.

MOUSER STOCK NO.	APM Hexseal Part No.	Fig.	Thread Size	Shaft Dia. (IN)	Dimensions: in.		Color	Price Each		
					A	B		1	25	50
608-N9030-X-1/4	N9030 X 1/4	H	3/8-32NS-2B	.250	0.219	0.500	Gray	2.74	2.57	2.41
608-N9040-X-1/8	N9040 X 1/8	H	1/4-32NEF-2B	.125	0.219	0.375	Gray	2.74	2.57	2.41
608-N9030-X-1/4-RFI	N9030 X 1/4 RFI	H	3/8-32NS-2B	.250	0.219	0.500	Gray	9.73	9.13	8.56
608-N9040-X-1/8-RFI	N9040 X 1/8 RFI	H	1/4-32NEF-2B	.125	0.219	0.375	Gray	12.42	11.64	10.93

APM HEXSEAL SEALED-SWITCH PANEL BUSHING SEAL

- Seals panel cutout through which the switch bushing passes
- Meets MIL-B-5423

RoHS Compliant

MOUSER STOCK NO.	APM Hexseal Part No.	Fig.	Shaft Brushing	Washer Dia.: in.	Thickness: in.	Price Each		
						1	25	50
608-60064	60064	I	15/32-32	.677	0.120	2.12	1.99	1.87

APM HEXSEAL SEALING BOOTS FOR LEVER-ACTUATED CIRCUIT BREAKERS

- High tear strength, transparent silicone rubber
- Does not compromise breaker operation or position status viewing
- Resistant to sunlight, weather, salt spray, ozone, fungus and most acids and lubricating oils
- Mounting hardware provided
- Meets MIL-B-5423

RoHS Compliant

MOUSER STOCK NO.	APM Hexseal Part No.	Fig.	Poles	Dimensions: in.					Carling	Tyco/ P&B	Price Each		
				H	L1	L2	W1	W2			1	25	50
Front-Panel Mounted													
608-CT1015	CT1015	J	1	0.875	1.875	2.625	1.375	0.875	CA1/DA1	W91	14.24	13.35	12.52
608-CT1020	CT1020	J	2	0.875	1.875	2.656	2.219	1.594	CA2/DA2	W92	16.12	15.11	14.18
608-CT1050	CT1050	J	3	0.875	1.875	2.656	2.656	2.344	CA3/DA3	W93	17.79	16.68	15.66
Back-of-Panel Mounted													
608-C1113/40	C1113/40	K	1	0.813	1.813	2.00	0.75	0.656	BA1	W67/W68/W69	11.40	10.69	10.03
608-C1113/42	C1113/42	K	2	0.813	1.813	2.00	1.50	1.406	BA2	W68/W69	13.21	12.38	11.62
608-C1113/43	C1113/43	K	3	0.813	1.813	2.00	2.25	2.156	BA3	W69	14.16	13.28	12.46

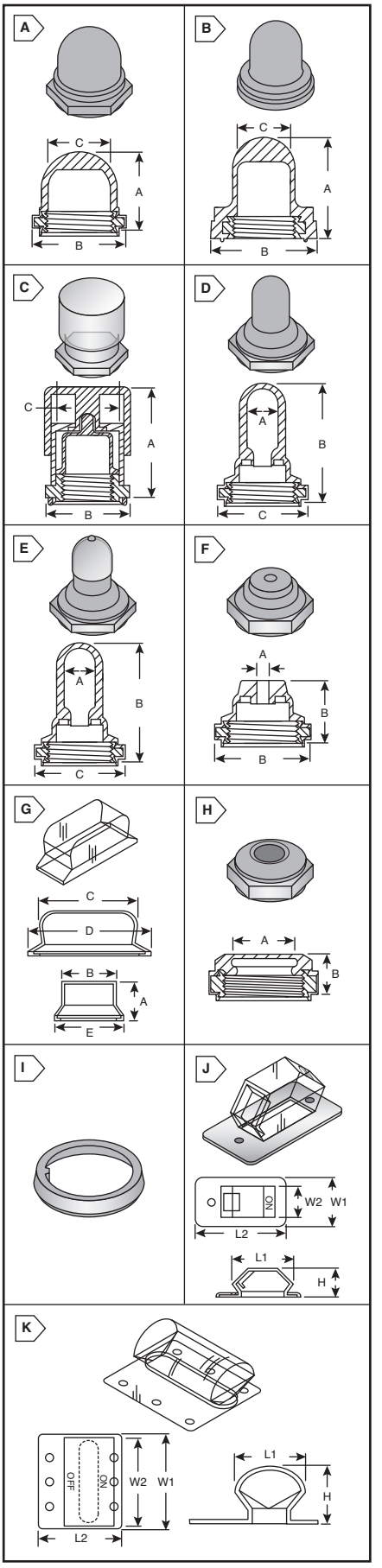

© Copyright 2009 Mouser Electronics

© Copyright 2009 Mouser Electronics