EAGLE PLASTIC DEVICES Nylon Wire Handling Hardware

eagle plastic devices

RoHS Compliant **This product is RoHS compliant.**

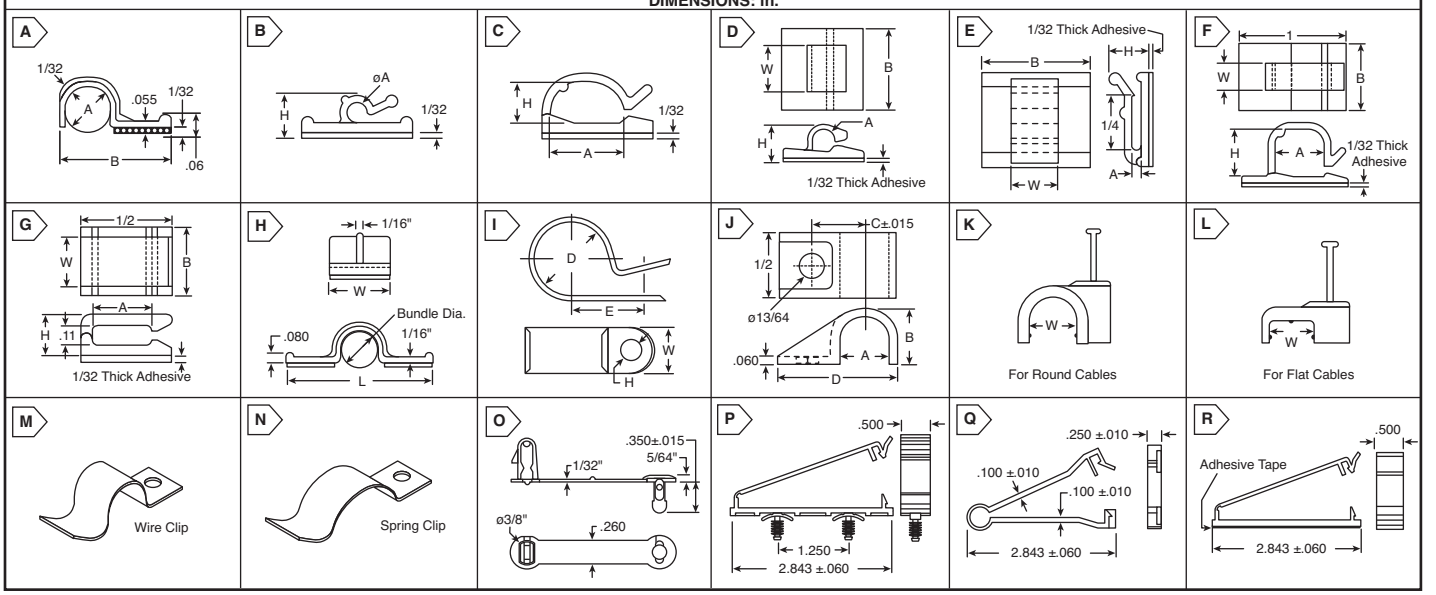

ADHESIVE BACKED CABLE CLIPS

- For fast installation
- Natural Nylon 6/6

For quantities of 2000 and up, call for quote.

MOUSER STOCK NO.	Fig.	Dimensions: in.				Price Each			
		A	B	W	H	1	100	500	1000
561-SP13037	A	.125	.493	.375	.217	.20	.16	.14	.11
561-SP25550	A	.250	.865	.500	.343	.20	.16	.14	.11
561-SP38562	A	.375	1.000	.625	.475	.23	.19	.16	.14
561-SP50575	A	.500	1.125	.750	.593	.25	.22	.19	.15
561-AWC00125	B	.125	.510	.200	.200	.15	.12	.10	.08
561-AWC00375	C	.460	.750	.375	.310	.25	.21	.18	.15
561-AWC187	D	.187	.650	.375	.266	.32	.26	.22	.21
561-AWCF2547	E	.035	.470	.200	.219	.26	.21	.19	.16
561-AWC440	F	.460	.625	.250	.440	.35	.28	.25	.23
561-AWCF32811	G	.328	.375	.270	.190	.27	.22	.20	.17

DOUBLE ADHESIVE CABLE CLIPS

Features:

- Tough, corrosion resistant nylon 6/6 clip is backed with a quality foam adhesive tape.
- The double clip design develops greater shear loads and holding power.
- To install, simply pull the clip off of the liner strip and press into place.
- No holes to drill or screws to turn.
- Nylon press clips provide a low in-place assembly that is quick and permanent.
- Polyethylene foam tape has excellent conformability, high temperature and solvent resistance and high ultimate bond strength.

For quantities of 5000 and up, call for quote.

MOUSER STOCK NO.	Fig.	Dimensions: in.			Price Each		
		Bundle Dia.	Hole Size	Width	1	100	1000
561-PC1337	H	.125	.760	.375	.50	.39	.26
561-PC2550	H	.250	1.380	.500	.50	.39	.26
561-PC3862	H	.375	1.505	.625	.63	.48	.33
561-PC5075	H	.500	1.600	.750	.63	.48	.33

CABLE CLAMPS

Heavy Duty

- Nylon 6/6

For quantities of 5000 and up, call for quote.

MOUSER STOCK NO.	Fig.	Dimensions: in.				Price Each		
		D	W	H	E	1	100	1000
561-B0125	I	1/8	1/2	.203	.315	.13	.08	.05
561-B0187	I	3/16	1/2	.203	.425	.13	.08	.05
561-B0250	I	1/4	1/2	.203	.410	.14	.10	.07
561-B0312	I	5/16	1/2	.203	.500	.13	.09	.06
561-B0375	I	3/8	1/2	.203	.530	.16	.11	.09
561-B0437	I	7/16	1/2	.203	.560	.16	.11	.09
561-B0500	I	1/2	1/2	.203	.595	.15	.06	.05
561-B0562	I	9/16	1/2	.203	.606	.15	.09	.07
561-B0625	I	5/8	1/2	.203	.655	.15	.09	.07
561-B0750	I	3/4	1/2	.203	.780	.19	.12	.09
561-B1000	I	1	1/2	.203	.910	.21	.14	.11
561-B1250	I	1 1/4	1/2	.203	1.06	.21	.14	.11
561-B1500	I	1 1/2	1/2	.203	1.19	.21	.14	.11

Standard

- Natural Nylon 6/6

For quantities of 1000 and up, call for quote.

MOUSER STOCK NO.	Fig.	Dimensions: in.				Price Each		
		D	W	H	E	1	100	500
561-C0125	I	1/8	3/8	.167	.329	.12	.07	.05
561-C0187	I	3/16	3/8	.167	.430	.12	.07	.05
561-C0250	I	1/4	3/8	.167	.410	.13	.08	.06
561-C0312	I	5/16	3/8	.167	.495	.12	.07	.05
561-C0375	I	3/8	3/8	.167	.595	.13	.08	.06
561-C0500	I	1/2	3/8	.167	.605	.14	.08	.06

HEAVY DUTY CABLE CLIPS

For quantities of 1000 and up, call for quote.

MOUSER STOCK NO.	Fig.	(In.) Size	Dimensions: in.				Price Each		
			A	B	C	D	1	100	500
561-1250CC	J	1/8	.115	.115	.307	.675	.29	.15	.11
561-1720CC	J	3/16	.172	.172	.328	.732	.32	.18	.13
561-2340CC	J	1/4	.234	.234	.366	.793	.34	.19	.13
561-2970CC	J	5/16	.297	.297	.400	.859	.35	.16	.10
561-3590CC	J	3/8	.359	.359	.430	.910	.38	.19	.12
561-4220CC	J	7/16	.422	.422	.460	.980	.37	.24	.20
561-4840CC	J	1/2	.484	.484	.492	1.044	.39	.19	.12

NAIL-IN CABLE CLIPS

Molded nail-in clips are used to safely install cable TV, fiber optics, computer networks, telephone, and other communication systems, hydraulic and pneumatic systems.

- Molded in Black, White Polyethylene

For quantities of 2000 and up, call for quote.

MOUSER STOCK NO.	Fig.	W: in.	Fits Cable Type	Price Each			
				1	100	500	1000
561-C0050	K	.197	RG-58	.26	.17	.13	.10
561-C0070	K	.276	RG-6	.26	.17	.13	.11
561-C0080	K	.315	TRIAX	.26	.17	.13	.11
561-C0090	L	.354	DUAL RG-6	.28	.19	.16	.13

WIRE CLIPS-SPRING CLIPS

These clips provide fast, secure assembly and routing of wires, standard round cable, flat cable and tubing. The spring clip can also be used to mount panels, glass, displays, or signs. All contact edges are rounded for product protection.

- Natural Nylon 6/6

For quantities of 2000 and up, call for quote.

MOUSER STOCK NO.	Fig.	Dimensions: in.	Price Each			
			1	100	500	1000
561-WC500312	M	1/2 x .312 Wire Clip	.29	.22	.15	.12
561-SCP375132	N	3/8 x .132 Spring Clip	.25	.18	.13	.10

WIRE RETAINING STRAPS

Wire and tube retaining straps are designed to be pushed into a .250 dia. hole, the wire or tube can then be placed on the strap, simply push the pin end into the receiver end and the wire or tube is secured in place. Part is molded in electrically insulating Nylon 6/6

For quantities of 5000 and up, call for quote.

MOUSER STOCK NO.	Fig.	Dimensions: in.			Price Each		
		Bundle Dia.	Hole Size	Width	1	100	1000
561-R25312	O	.312	.250	.260	.50	.39	.26
561-R25375	O	.375	.250	.260	.50	.39	.26
561-R25437	O	.437	.250	.260	.50	.39	.26
561-R25500	O	.500	.250	.260	.50	.39	.26
561-R25562	O	.562	.250	.260	.50	.39	.26

RIBBON CLIPS

Features:

- One Piece Ribbon Clip and Adhesive Ribbon Cable are molded in tough non-conductive nylon.
- The design allows for quick positive clamping of flat cable up to 50 conductors wide, without the need for securing the clip to a board or chassis. One Piece Ribbon Clips are releasable and reusable. The Adhesive Clips have a peel and stick adhesive backing.
- Natural Nylon 6/6

For quantities of 5000 and up, call for quote.

MOUSER STOCK NO.	Fig.	Description	Price Each		
			1	100	1000
561-CC250	P	Ribbon clip - Fin clip base	.93	.73	.66
561-CC200	Q	Ribbon clip - Quick move	.47	.36	.24
561-CC251	R	Ribbon clip - Adhesive base	1.06	.80	.70

© Copyright 2009 Mouser Electronics

MOUSER ELECTRONICS a tti company
(800) 346-6873
Mouser Catalog Download

© Copyright 2009 Mouser Electronics